POWER SUPPLIES & INPUTS

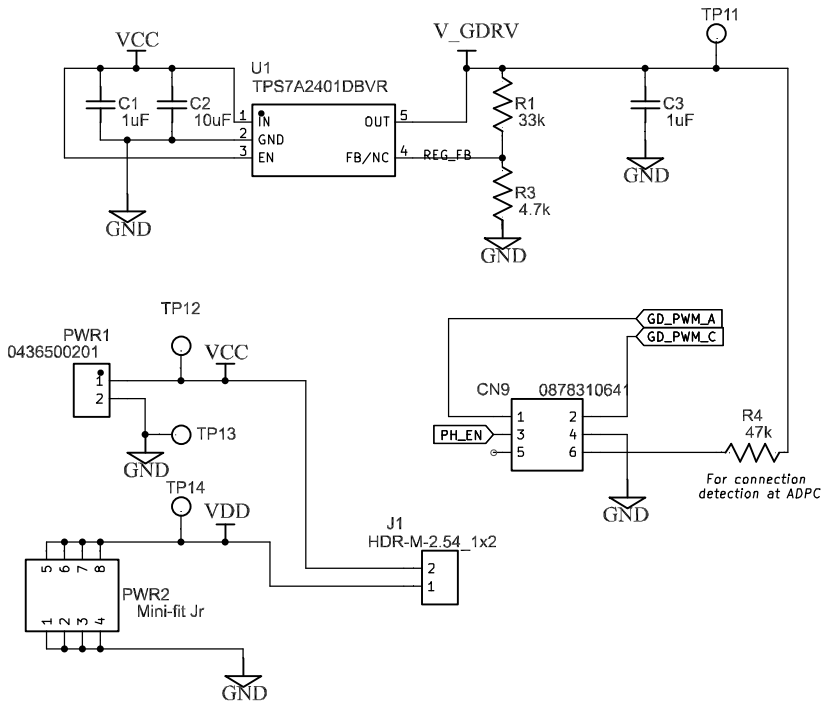

INPUT FILTERING

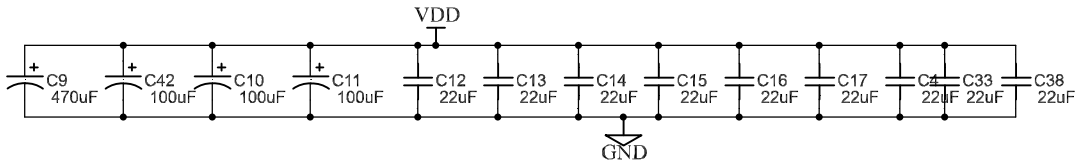

Sheet: /
File: MPHB-002 Schematic Supplies and Filtering.kicad_sch

Title: MPHB-002 Power Supplies & Input Filter

Size: A4	Date: 2026-04-06	Rev: SCH-002-02
KiCad E.D.A. 9.0.4		Id: 1/1